DC-DC Converter Simulation (Buck & Boost) using LTspice

This project focuses on the design and simulation of DC-DC converters using LTspice. Both buck (step-down) and boost (step-up) converters were implemented to analyze voltage conversion and circuit behavior.

Tools Used

- LTspice
- Basic electronic components (inductor, capacitor, diode, MOSFET, resistor)

Buck Converter (Step-Down)

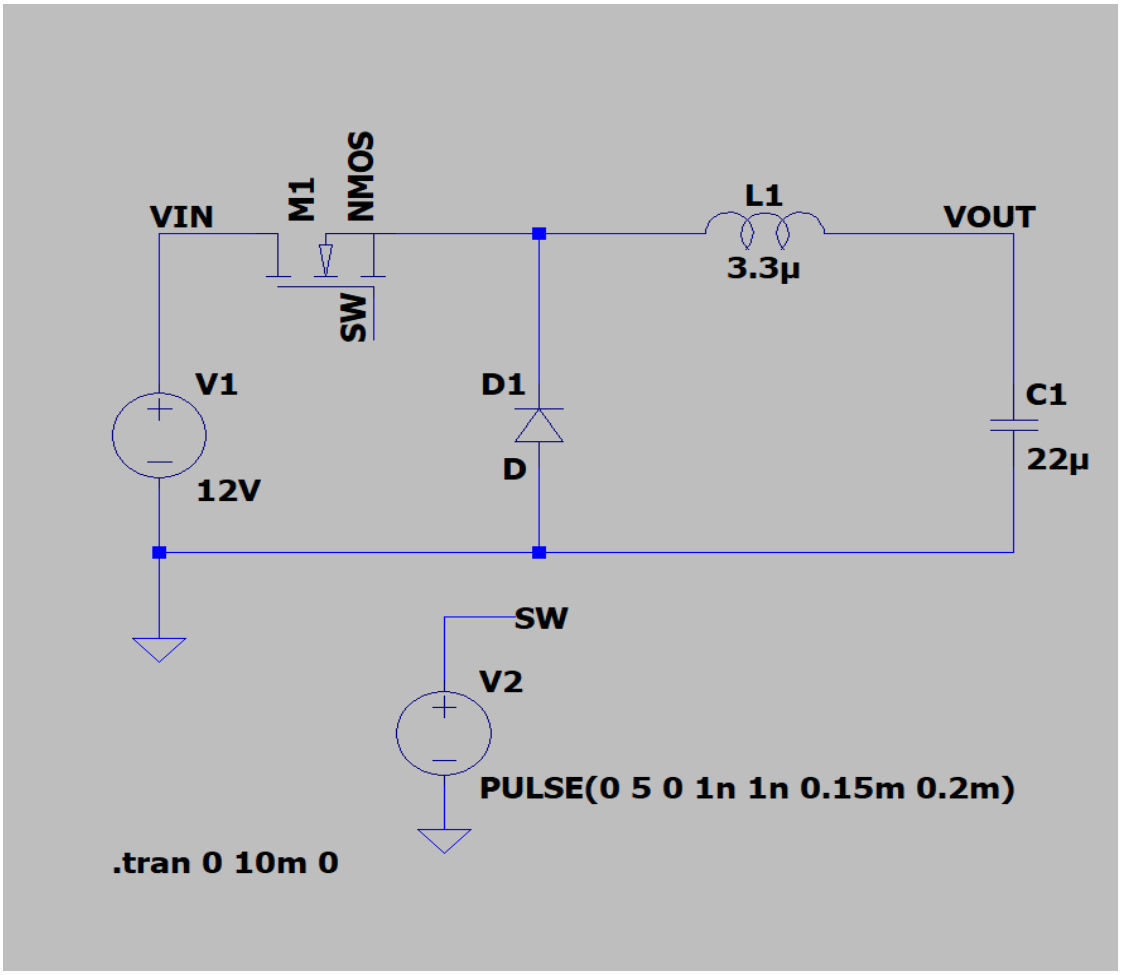

A buck converter is a DC-DC converter that steps down the input voltage to a lower output voltage. It operates using a switching device (MOSFET), diode, inductor, and capacitor. When the switch is ON, energy is stored in the inductor, and when it is OFF, the inductor releases energy to the load, maintaining continuous current flow.

Output waveform

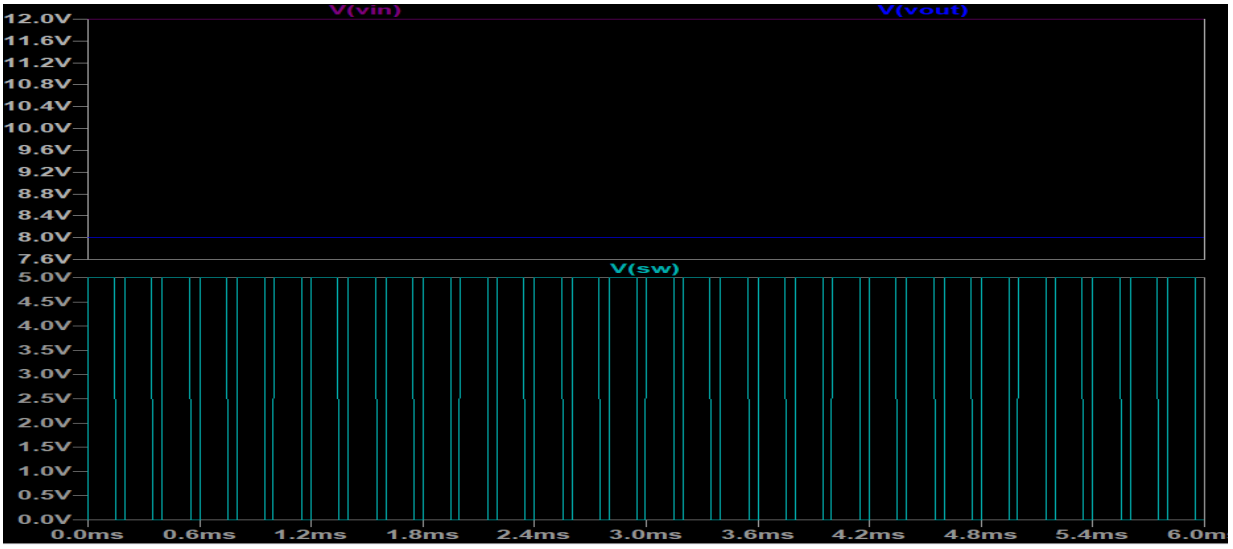

The buck converter reduces input voltage to a lower output voltage. The simulation demonstrates stable output with reduced voltage and observable ripple.

Boost Converter (Step-Up)

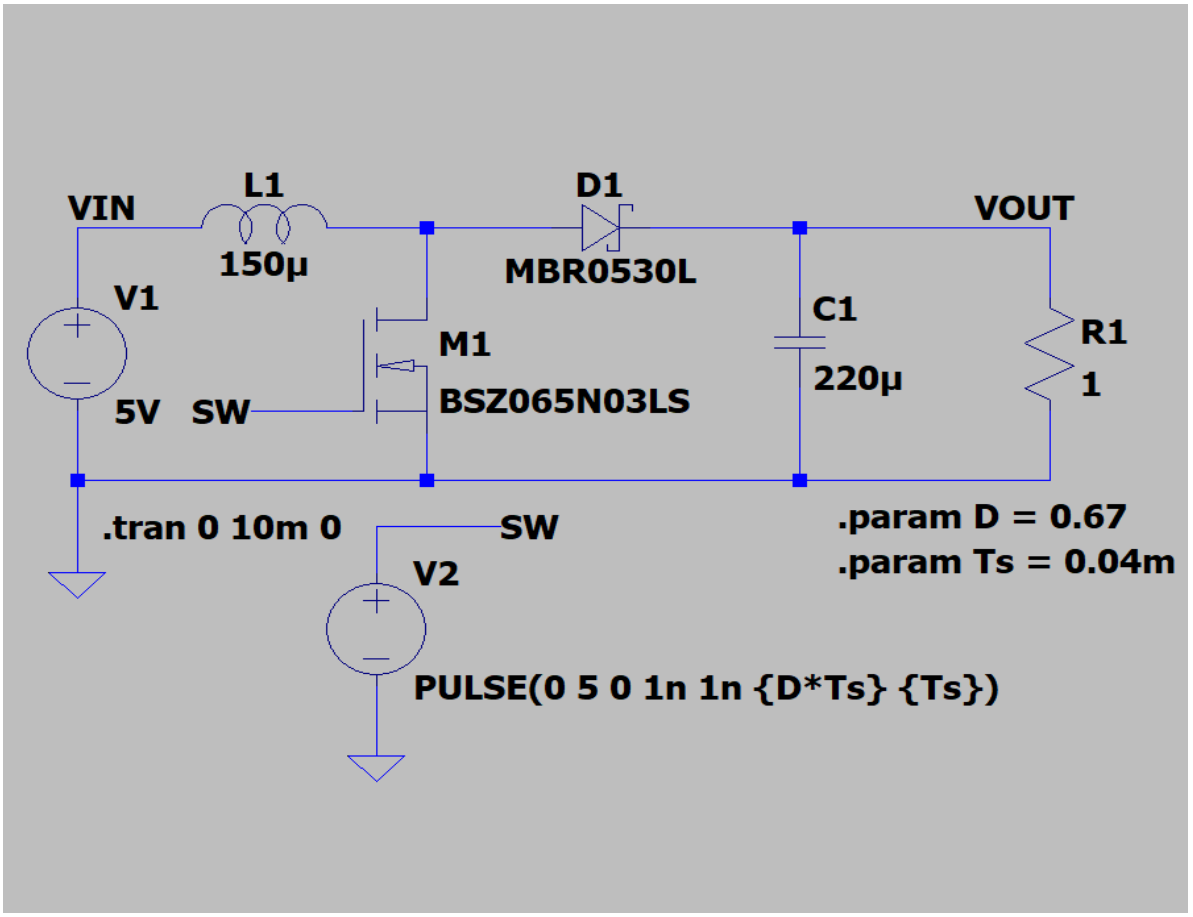

A boost converter increases the input voltage to a higher output voltage. During the ON state, energy is stored in the inductor. When the switch turns OFF, the stored energy is released and added to the input voltage, resulting in a higher output.

Output waveform

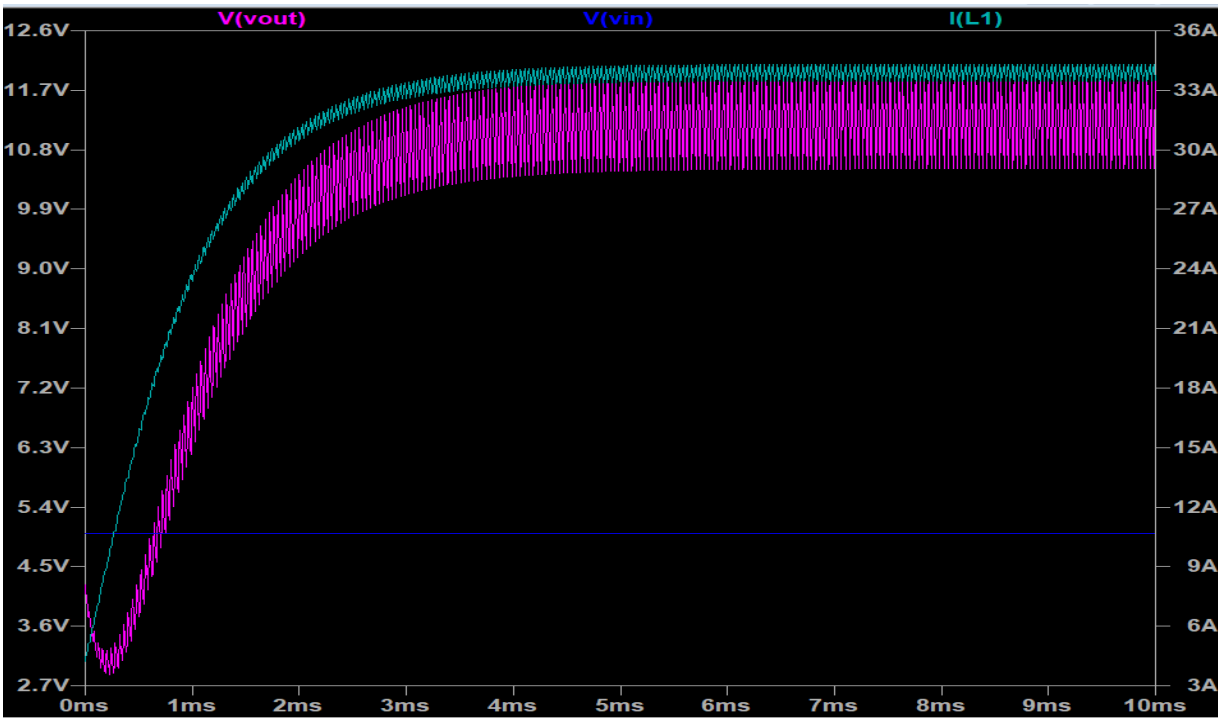

The boost converter increases input voltage to a higher output level. The simulation shows voltage amplification and switching behavior under load conditions.

Comparison of Output Voltages (Buck vs Boost)

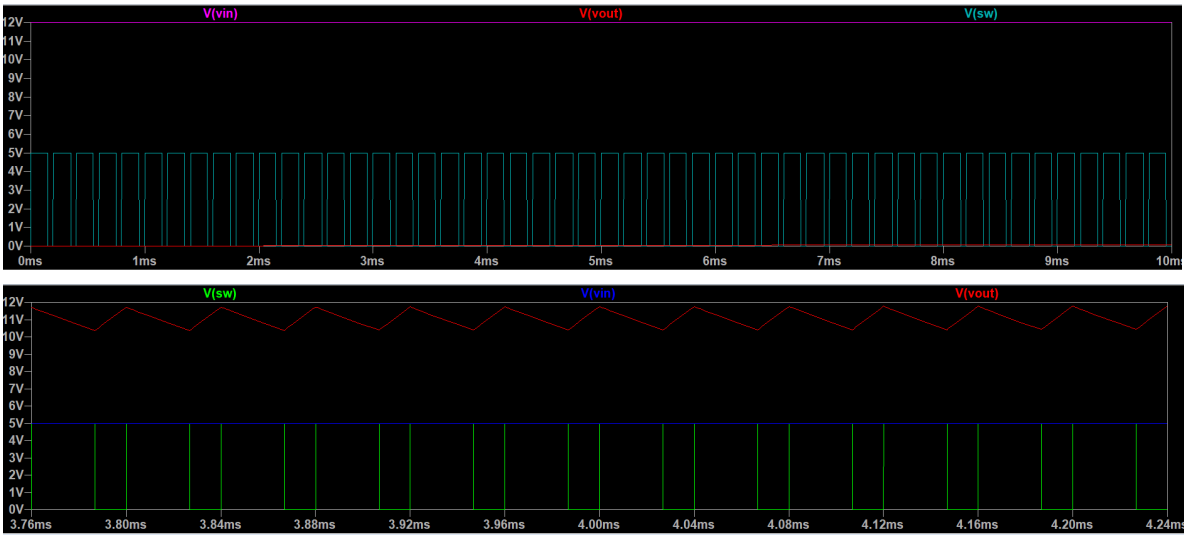

PID Controller in LTspice

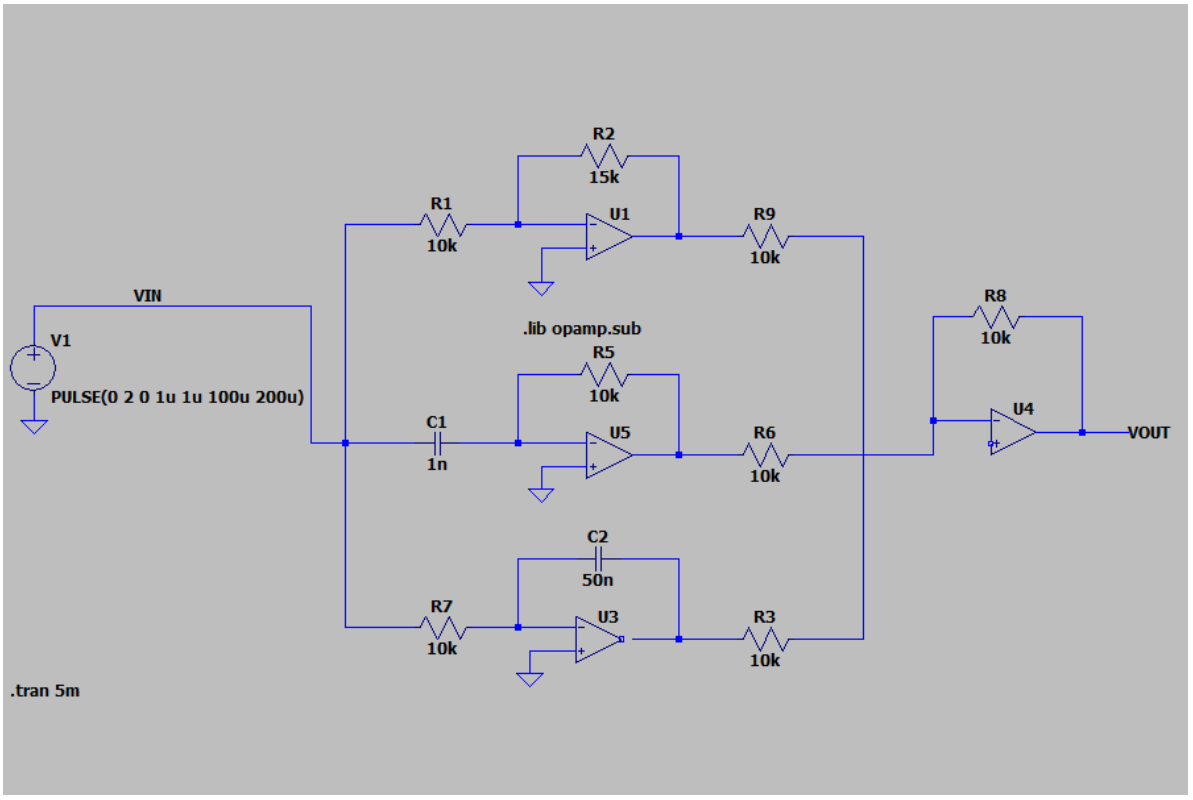

A PID (Proportional-Integral-Derivative) controller is implemented in LTspice to regulate the output voltage of the converter. It continuously adjusts the system to minimize error and improve stability. (Closed-loop mechanism)

Output waveform

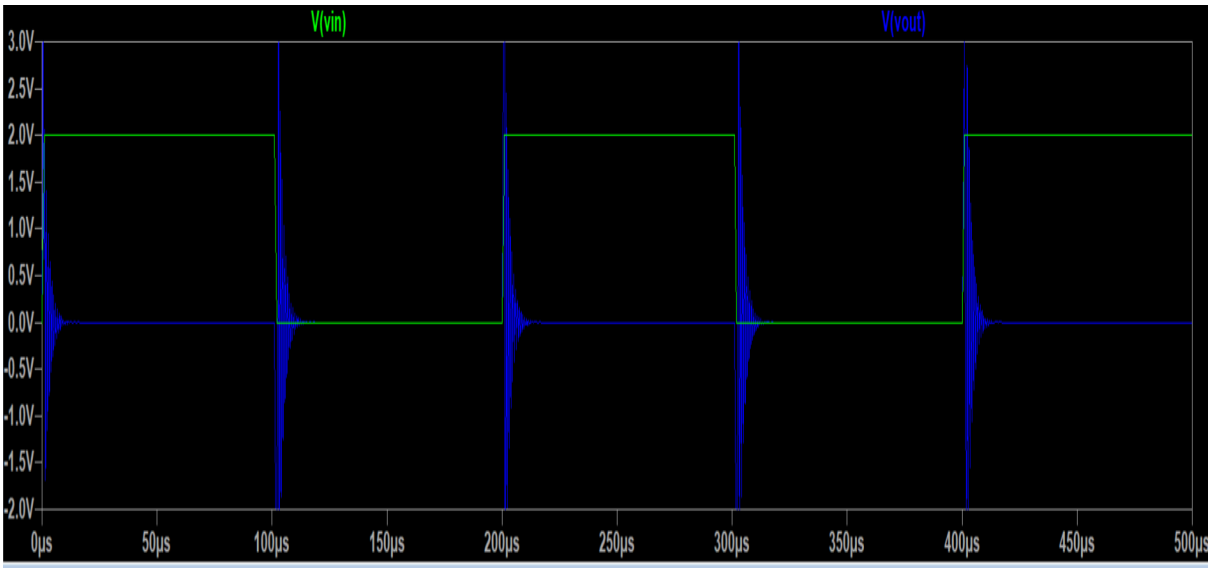

The output waveform shows a controlled response to step input, with minimal oscillations and fast settling time, demonstrating effective PID tuning.